PHOBOS MEDIUM CHANDELIER

VISUAL COMFORT & CO.

PRODUCT FEATURES

- From the brand formerly known as Tech Lighting
- Laser etched tubing to diffuse light surrounded by clear borosilicate glass
- Geometric frame for a modern take on a traditional fixture
- The LED Driver is housed within the junction box. (L. 3.05" | W. 1.5" | H. 1")
- Fully dimmable integrated LED lamp
- This item is made of natural brass. It is a living finish that will patina and warm with age which adds richness. If it gets an uneven patina or spots, a brass cleaner can restore the finish



Natural Brass

LAMPING

Includes 22.2 watts, 1078 total delivered lumens, 2700K LED modules. Dimmable with most LED compatible ELV and Triac dimmers. 277V dimmable with 0-10V dimmers. Ships with (4) 12" and (2) 6" rigid stems in coordinating finish. 120V or 277V. Can be installed on a sloped ceiling up to 30°.



Natural Brass Dark Bronze

ORDERING INFORMATION

700PHB	LENGTH (A)	FINISH	LAMP
	24 24"	BZ DARK BRONZE	-LED927 INTEGRATED LED 90 CRI 2700K 120V
		NB NATURAL BRASS	-LED927-277 INTEGRATED LED 90 CRI 2700K 277V

700PHB _____ _____ _____

JOB NAME _____

NOTES _____

_____

© 2019 Tech Lighting, L.L.C. All rights reserved. The "Tech Lighting" graphic is a registered trademark of Tech Lighting, L.L.C.
Tech Lighting reserves the right to change specifications for product improvements without notification.

7400 Linder Avenue, Skokie, IL 60077
T 847.410.4400 | F 847.410.4500 | techlighting.com

PHOBOS MEDIUM CHANDELIER

VISUAL COMFORT & CO.

SPECIFICATIONS

PRIMARY MATERIAL	Brass
SHADE MATERIAL	Glass
NET WEIGHT	13.5 lbs
HEIGHT	15.7in
WIDTH	24in
LENGTH	24in
UP LIGHT / DOWN LIGHT / BOTH?	
WET LISTED	
DAMP LISTED	
DRY LISTED	
MIN. HANGING HEIGHT	23.2in
MAX HANGING HEIGHT	77.2in
TOTAL CORD LENGTH	
TOTAL STEM LENGTH	Up to 60in
STEM QTY	6
SLOPED CEILING ADAPTABLE?	Yes 30° Max
GENERAL LISTING	ETL Listed
INCLUDES	

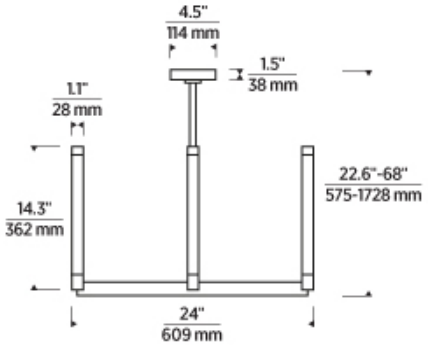

LAMPING SPECIFICATIONS

	LED LAMP	INTEGRATED LED	NON LED	NO LAMP
DELIVERED LUMENS		1078		
WATTS		22.2		
MAX WATTAGE PER BULB		22.2W		
		120V ELV, TRIAC 277V 0-10V		
CCT		2700K		
CRI		90 CRI		
LED LIFETIME				
L70		>50000		
AVERAGE BULB HOURS				
FIELD SERVICEABLE LED				
LAMP BASE		Integrated LED		
LAMP SHAPE		Integrated LED		
LAMP INCLUDED?		True		
WARRANTY**		5 Years		

* Dimming information available at www.techlighting.com/Downloads#dimming
** Visit techlighting.com for specific warranty limitations and details.

T20 / T24 / JA8 INFORMATION

	Integrated LED	Replacement LED Lamp	No Lamp *
This product can be used to comply with California Building Energy Efficiency Standards 2016 Title 24 Part 6 / JA8.	Yes		
This product can be used to comply with California Appliance Efficiency Standards 2016 Title 20 and may be shipped to and sold in California.	N/A		

* If a light fixture or component does not include a lamp or light source, it is the responsibility of the customer to select a lamp that meets the T24 and T20 requirements.

© 2019 Tech Lighting, L.L.C. All rights reserved. The "Tech Lighting" graphic is a registered trademark of Tech Lighting, L.L.C.
Tech Lighting reserves the right to change specifications for product improvements without notification.

7400 Linder Avenue, Skokie, IL 60077
T 847.410.4400 | F 847.410.4500 | techlighting.com