ESFERA LARGE LINEAR

VISUAL COMFORT & CO.

PRODUCT FEATURES

- From the brand formerly known as Tech Lighting
- Laser etched crystal captures the light
- Includes (4) 6" and (8) 12" rigid stems in coordinating finish.
- Fully dimmable integrated LED lamp
- This item is made of natural brass. It is a living finish that will patina and warm with age which adds richness. If it gets an uneven patina or spots, a brass cleaner can restore the finish



LAMPING

Includes 25.1 watts, 2417 total delivered lumens, 2700K LED module. Dimmable with most LED compatible ELV, and TRIAC dimmers. 277V dimmable with 0-10V dimmers. Ships with (8) 12" and (4) 6" rigid stems in coordinating finish. Can be installed on a sloped ceiling up to 15°. 120V or 277V.

Natural Brass



Natural Brass Black

ORDERING INFORMATION

700LSESF	LENGTH (A)	FINISH	LAMP
	60 60"	NB NATURAL BRASS	-LED927 INTEGRATED LED 90 CRI 2700K 120V
		B NIGHTSHADE BLACK	-LED927-277 INTEGRATED LED 90 CRI 2700K 277V

700LSESF _____ _____ _____

JOB NAME _____

NOTES _____

_____

© 2019 Tech Lighting, L.L.C. All rights reserved. The "Tech Lighting" graphic is a registered trademark of Tech Lighting, L.L.C.
Tech Lighting reserves the right to change specifications for product improvements without notification.

7400 Linder Avenue, Skokie, IL 60077
T 847.410.4400 | F 847.410.4500 | techlighting.com

ESFERA LARGE LINEAR

VISUAL COMFORT & CO.

SPECIFICATIONS

PRIMARY MATERIAL	Aluminum or Brass
SHADE MATERIAL	Crystal
NET WEIGHT	25 lbs
HEIGHT	4.8in
WIDTH	2.5in
LENGTH	60in
UP LIGHT / DOWN LIGHT / BOTH?	
WET LISTED	
DAMP LISTED	
DRY LISTED	
MIN. HANGING HEIGHT	12.7in
MAX HANGING HEIGHT	66.7in
TOTAL CORD LENGTH	
TOTAL STEM LENGTH	Up to 120in
STEM QTY	12
SLOPED CEILING ADAPTABLE?	Yes 15° Max
GENERAL LISTING	ETL Listed
INCLUDES	

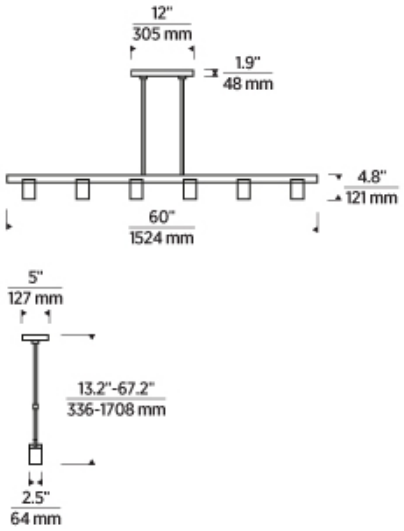

LAMPING SPECIFICATIONS

	LED LAMP	INTEGRATED LED	NON LED	NO LAMP
DELIVERED LUMENS		2417		
WATTS		25.1		
MAX WATTAGE PER BULB		25.1W		
		120V ELV, TRIAC 277V 0-10V		
CCT		2700K		
CRI		90 CRI		
LED LIFETIME				
L70		>50000		
AVERAGE BULB HOURS				
FIELD SERVICEABLE LED				
LAMP BASE		Integrated LED		
LAMP SHAPE		Integrated LED		
LAMP INCLUDED?		True		
WARRANTY**		5 Years		

* Dimming information available at www.techlighting.com/Downloads#dimming
** Visit techlighting.com for specific warranty limitations and details.

T20 / T24 / JA8 INFORMATION

	Integrated LED	Replacement LED Lamp	No Lamp *
This product can be used to comply with California Building Energy Efficiency Standards 2016 Title 24 Part 6 / JA8.	Yes		
This product can be used to comply with California Appliance Efficiency Standards 2016 Title 20 and may be shipped to and sold in California.	N/A		

* If a light fixture or component does not include a lamp or light source, it is the responsibility of the customer to select a lamp that meets the T24 and T20 requirements.

© 2019 Tech Lighting, L.L.C. All rights reserved. The "Tech Lighting" graphic is a registered trademark of Tech Lighting, L.L.C.
Tech Lighting reserves the right to change specifications for product improvements without notification.

7400 Linder Avenue, Skokie, IL 60077
T 847.410.4400 | F 847.410.4500 | techlighting.com